JASON HYDROTHERAPY
8328 MacArthur Dr. • North Little Rock, AR 72118
501.771.4477 • Fax: 501.771.2333
Customer Service: 800.255.5766
www.jasoninternational.com

Designer Collection Specifications
Whirlpool & Soaking - DE4646
Delizia™

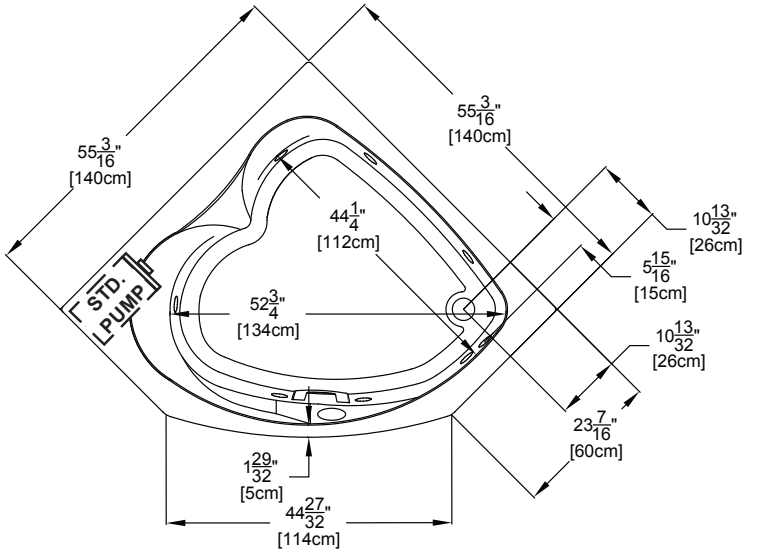

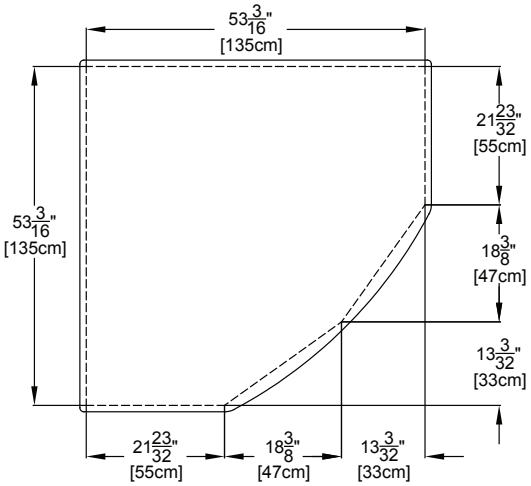

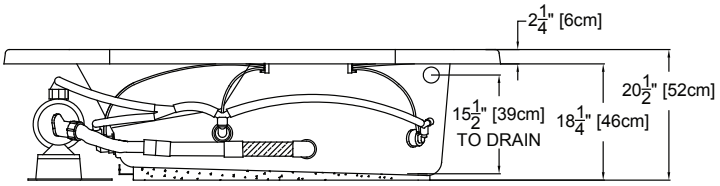

Patents received or pending.

Note: Dimensional Tolerances: ±1/4"

Note: The pump extends approximately 1" past the end radius of the bath. This requires angling the bath into the drop-in hole.

Drop-in-Hole Size:	See Diagram
Operating Capacity:	59 Gal.
Overflow Capacity:	71 Gal.
Floor Loading/sq.ft. (WP/Soaking):	54.1/50.8 lbs.
Carton Wt. (WP/Soaking):	142/94 lbs.
Cube:	43.1 $ft.^3$

Construction: Fiberglass reinforced acrylic bath with Level Form™ full-support base.

We provide products listed with Intertek ETL SEMKO (Edison Testing Laboratories) U.S. and Canadian and with International Association of Plumbing and Mechanical Officials (IAPMO). Consult factory with your listing requirements.

Standard

A 120V system that includes a quiet 1-1/2 HP, 1-speed whirlpool pump; an electronic control with a low water level sensor to prevent the pump from operating without water; and a 20-minute timer. The keypad also operates the optional LED Chromatherapy mood light.

Premier

A 120V system that includes a whisper quiet 1-1/2 HP, 1-speed combination whirlpool pump/heater, Chromatherapy mood light, Automatic Ozone System; an electronic control with a low water level sensor to prevent the pump from operating without water; and a 20-minute timer. The keypad also operates the LED Chromatherapy mood light.

Signature

A 240V system that includes a quiet 1-1/2 HP, 3-speed whirlpool pump, Chromatherapy mood light, Automatic Ozone System, Automatic 1.5kW Heater; a digital control with LCD display window; low water level and water temperature sensors; and a 20-minute timer. Control keypad operates the pump, LED Chromatherapy mood light, optional Jetted Neck Pillow and shows water temperature, pump speed and time remaining. Includes a floating Universal Remote Control that operates all functions of pump and LED Chromatherapy mood light plus TV, DVD, CD, etc.

Copyright © 2011 Jason International.